Cambridge Assessment International Education

Cambridge International AS & A Level

CANDIDATE NAME									
CENTRE NUMBER						CANDIDATE NUMBER				

0213932513

PHYSICS **9702/52**

Paper 5 Planning, Analysis and Evaluation **October/November 2020**

1 hour 15 minutes

You must answer on the question paper.

No additional materials are needed.

INSTRUCTIONS

- Answer **all** questions.
- Use a black or dark blue pen. You may use an HB pencil for any diagrams or graphs.
- Write your name, centre number and candidate number in the boxes at the top of the page.
- Write your answer to each question in the space provided.
- Do **not** use an erasable pen or correction fluid.
- Do **not** write on any bar codes.
- You may use a calculator.
- You should show all your working and use appropriate units.

INFORMATION

- The total mark for this paper is 30.
- The number of marks for each question or part question is shown in brackets [ ].

This document has **8** pages. Blank pages are indicated.

© UCLES 2020

1 A student investigates the motion of a trolley on a wooden surface, as shown in Fig. 1.1.

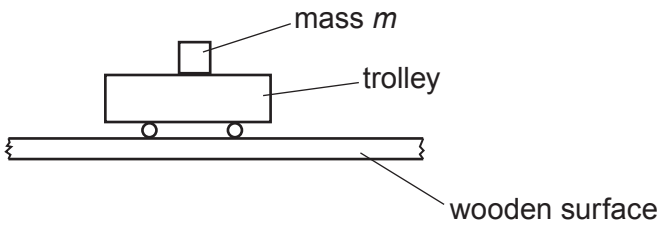

Fig. 1.1

A mass *m* is placed on the trolley.

A mass *P* is attached to the trolley by string which passes over a pulley. When this mass falls, it pulls the trolley along the surface.

The trolley is initially at rest. The student investigates how the speed *v* of the trolley at a distance *d* from the initial position of the trolley varies with *m*.

It is suggested that the relationship between *v* and *m* is

$$\frac{2d}{v^2} = \frac{m + R}{Pg - Q}$$

where *g* is the acceleration of free fall and *Q* and *R* are constants.

Design a laboratory experiment to test the relationship between *m* and *v*.
Explain how your results could be used to determine values for *Q* and *R*.

You should draw a diagram, on page 3, showing the arrangement of your equipment. In your account you should pay particular attention to:

- the procedure to be followed
- the measurements to be taken
- the control of variables
- the analysis of the data
- any safety precautions to be taken.

© UCLES 2020

Diagram

.....

.....

.....

.....

.....

.....

.....

.....

.....

.....

.....

.....

.....

.....

.....

.....

.....

.....

.....

2 A student investigates the behaviour of a liquid inside a narrow tube, as shown in Fig. 2.1.

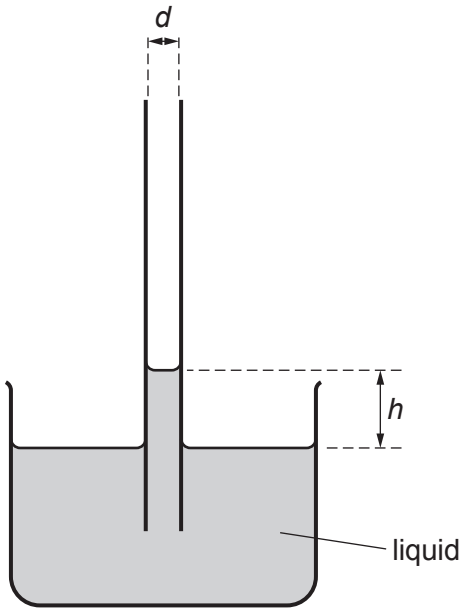

Fig. 2.1 (not to scale)

When the tube is placed in the liquid, the liquid rises in the tube. The student measures the internal diameter d of the tube and the maximum height h that the liquid rises in the tube.

The experiment is repeated for tubes of different diameter.

It is suggested that h and d are related by the equation

$$h = \frac{4\sigma}{d\rho g}$$

where ρ is the density of the liquid, g is the acceleration of free fall and σ is a constant.

(a) A graph is plotted of h on the y-axis against $\frac{1}{d}$ on the x-axis.

Determine an expression for the gradient.

gradient = ... [1]

(b) Values of d and h are given in Table 2.1.

Table 2.1

d/mm	$\frac{1}{d}$/mm^{-1}	h/mm
1.1 ± 0.1		18.3
1.3 ± 0.1		15.1
1.5 ± 0.1		13.1
1.7 ± 0.1		11.6
2.0 ± 0.1		9.9
2.3 ± 0.1		8.6

Calculate and record values of $\frac{1}{d}$/mm^{-1} in Table 2.1.

Include the absolute uncertainties in $\frac{1}{d}$. [2]

(c) **(i)** Plot a graph of h/mm against $\frac{1}{d}$/mm^{-1}.

Include error bars for $\frac{1}{d}$. [2]

(ii) Draw the straight line of best fit and a worst acceptable straight line on your graph. Both lines should be clearly labelled. [2]

(iii) Determine the gradient of the line of best fit. Include the absolute uncertainty in your answer.

gradient = ... [2]

© UCLES 2020

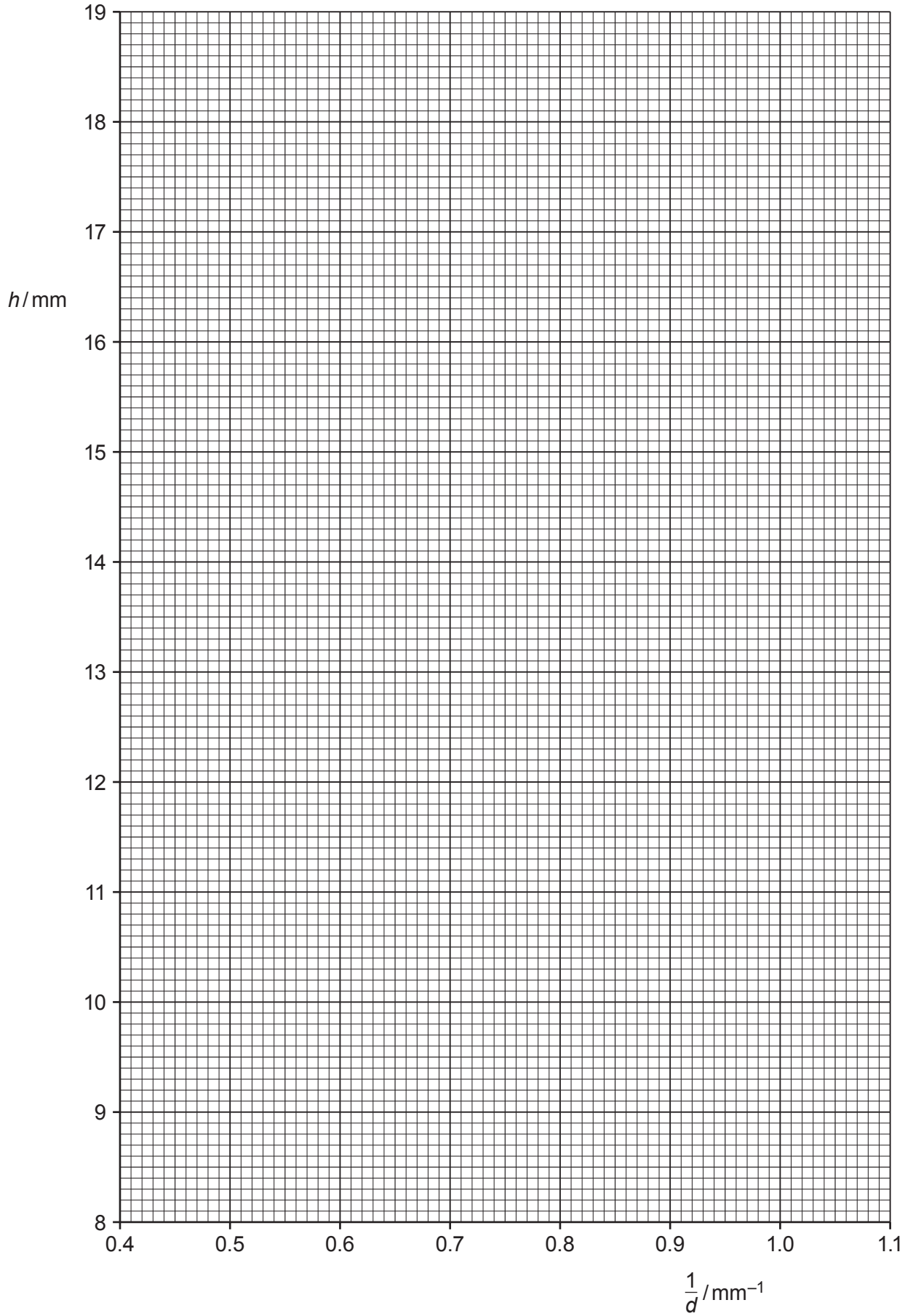
19
18
17
h / mm
16
15
14
13
12
11
10
9
8
0.4
0.5
0.6
0.7
0.8
0.9
1.0
1.1
1/d / mm⁻¹

(d) The student determines the density of the liquid by weighing the empty beaker, adding a measured volume of the liquid and then reweighing the beaker.
The student then uses the relationship

$$\text{density} = \frac{\text{mass}}{\text{volume}}.$$

The student's results are:
mass of empty beaker = (422 ± 1) g
mass of beaker and liquid = (606 ± 1) g
volume of liquid = (146 ± 2) cm^3.

(i) Determine the density ρ of the liquid.

ρ = ... $kg\,m^{-3}$ [1]

(ii) Determine the percentage uncertainty in ρ.

percentage uncertainty = ...% [1]

(e) Using your answers to **(a)**, **(c)(iii)** and **(d)**, determine the value of σ. Include an appropriate unit and the absolute uncertainty in your answer.

Data: $g = 9.81\,m\,s^{-2}$

σ = ... [3]

(f) The experiment is repeated with a different tube. The height h is measured to be 22.0 mm. Determine the diameter d of this tube.

d = ... [1]

[Total: 15]

To avoid the issue of disclosure of answer-related information to candidates, all copyright acknowledgements are reproduced online in the Cambridge Assessment International Education Copyright Acknowledgements Booklet. This is produced for each series of examinations and is freely available to download at www.cambridgeinternational.org after the live examination series.

© UCLES 2020